GT023 - GT023H

hotbath
italian bathroomware

2-hole washbasin mixer, with swivel spout
Miscelatore 2 fori da lavabo, con bocca girevole
Mitigeur 2-trous de lavabo, avec bec mobile
2-Loch-WaschtischBatterie, mit Schwenkauslauf
Monomando de lavabo de 2 agujeros, con caño giratorio
Wastafelmengkraan 2-gats met draaibare uitloop, zonder waste



GT023



GT023H

BEFORE STARTING / PRIMA DI INIZIARE / AVANT DE COMMENCER / ANTES DE EMPEZAR / VOR DEM START / VOORDAT JE BEGINT

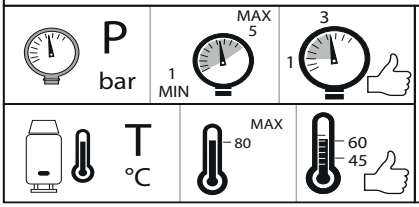



FILTER TAPS RECOMMENDED

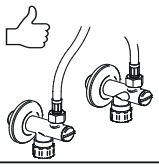

INSTALLATION

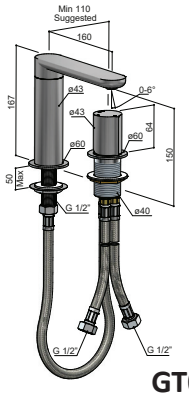

GT023

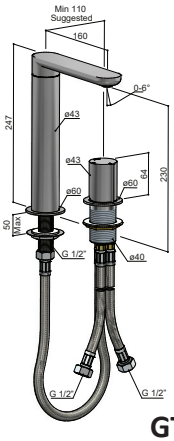

GT023H

1

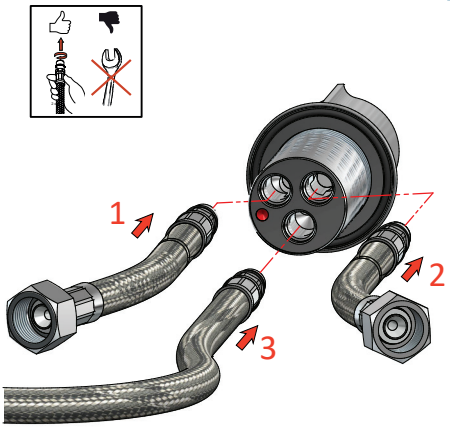

2

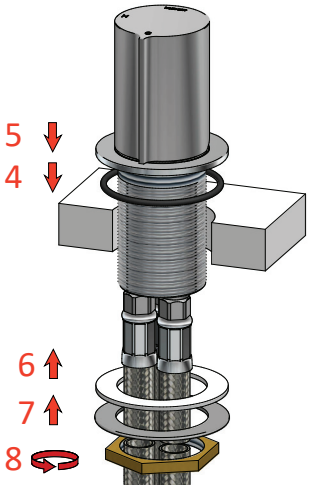

3

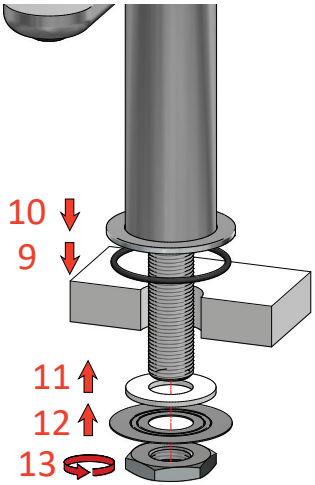

4

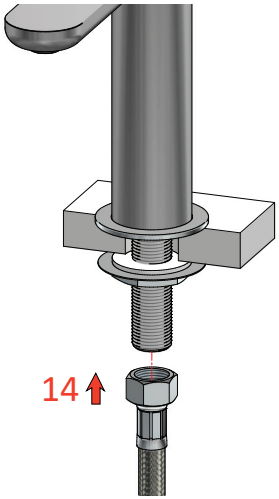

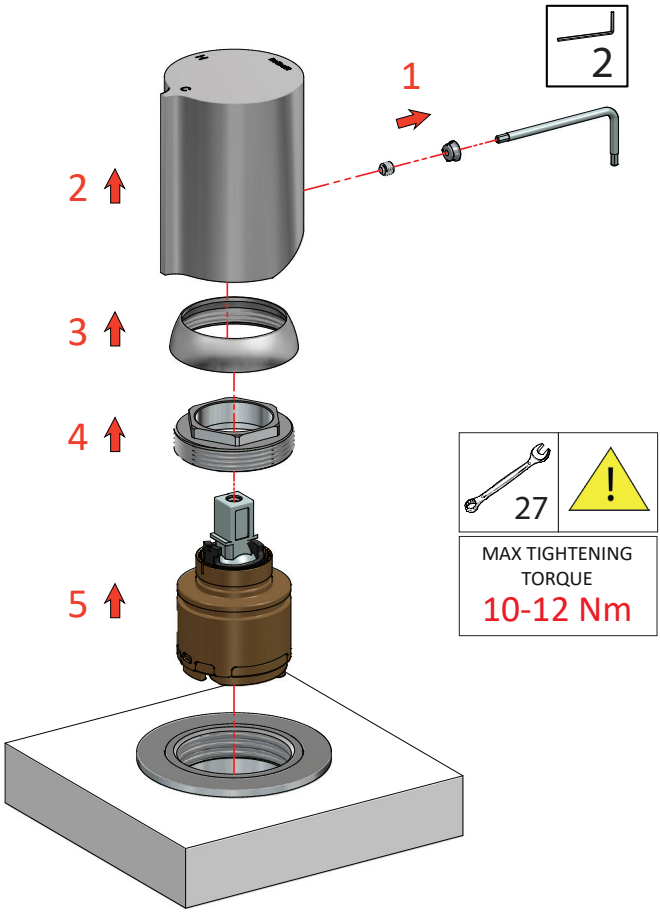
1
2
2
3
4
5
27
!
MAX TIGHTENING
TORQUE
10-12 Nm

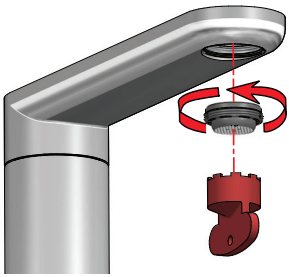

CLEANING - PULIZIA - NETTOYAGE - REINIGUNG - LIMPIEZA - REINIGING

	WARNING					
IX BRUSHED STEEL	Inoxidable 316 steel Acciaio 316 inossidabile Acier 316 inoxydable Inoxidierbare Edelstahl 316 Acero 316 inoxidable Inoxidable RVS 316	 WATER ✓	 LIQUID SOAP ✓	 SMOOTH CLOTH ✓	 ABRASIVE SPONGE ✗	 ACID/ABRASIVE DETERGENT ✗

TERMS OF SALE AND WARRANTY
CONDIZIONI DI VENDITA E GARANZIA
CONDITIONS DE VENTE ET GARANTIE

NETHERLANDS
BELGIUM
LUXEMBOURG
UK AND IRELAND

https://www.hotbath.nl/garantie

Hotbath B.V.
Nieuwland Parc 210
2952 DC Alblasserdam
Nederland
E info@hotbath.nl
W hotbath.nl

CONDICIONES DE VENTA Y GARANTÍA
VERKAUFSBEDINGUNGEN UND GARANTIE
VERKOOP- EN GARANTIEVOORWAARDEN

ALL COUNTRIES
(EXCEPTED BENELUX, UK AND IRELAND)

https://hotbath.it/en/termsofsale

Hotbath Srl
Via Marco Polo 135/D
I-55049 Viareggio
Italy
E info@hotbath.it
W hotbath.it

hotbath
italian bathroomware