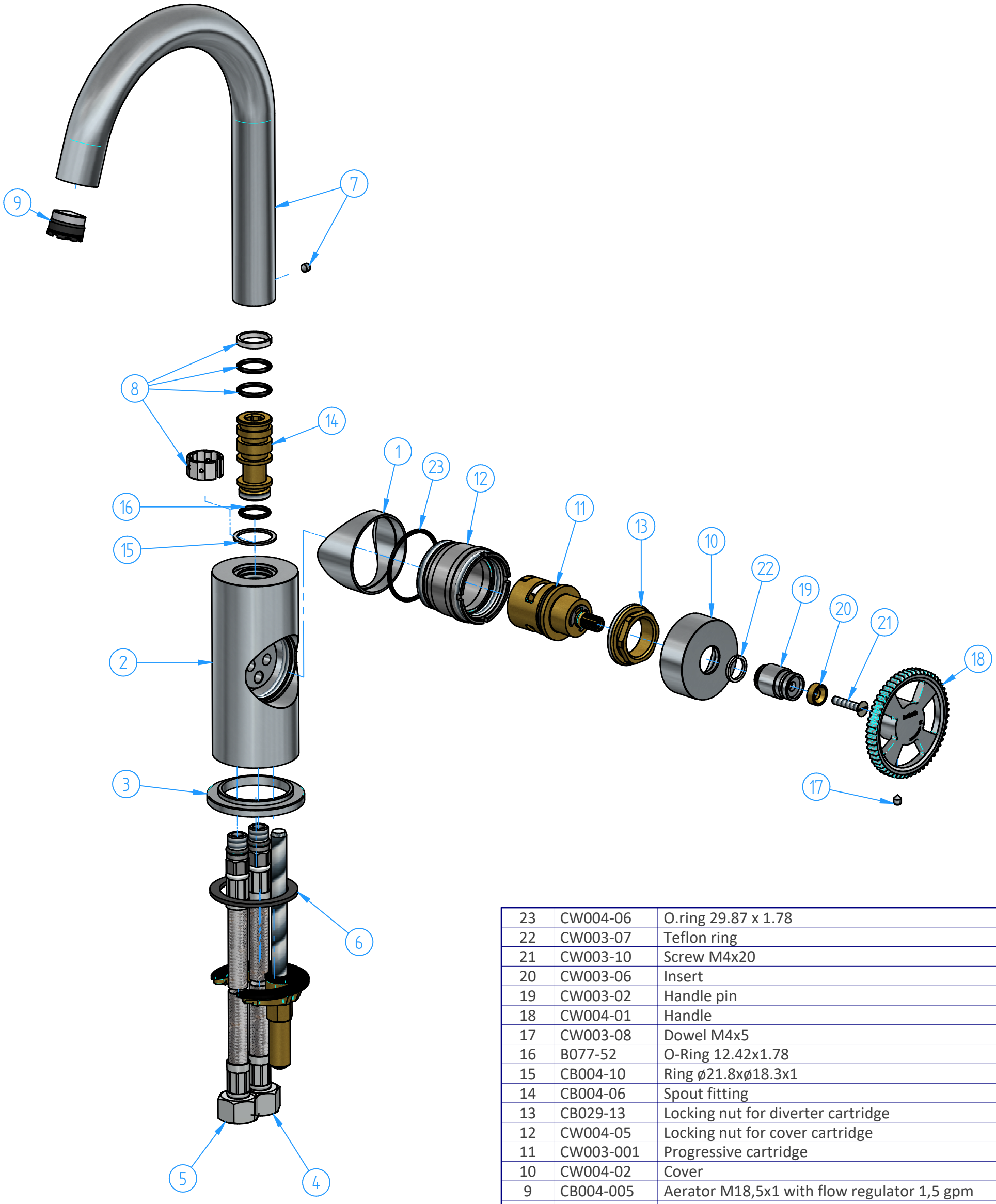

ID	Code	Description	Pcs
23	CW004-06	O.ring 29.87 x 1.78	1
22	CW003-07	Teflon ring	1
21	CW003-10	Screw M4x20	1
20	CW003-06	Insert	1
19	CW003-02	Handle pin	1
18	CW004-01	Handle	1
17	CW003-08	Dowel M4x5	1
16	B077-52	O-Ring 12.42x1.78	1
15	CB004-10	Ring ø21.8xø18.3x1	1
14	CB004-06	Spout fitting	1
13	CB029-13	Locking nut for diverter cartridge	1
12	CW004-05	Locking nut for cover cartridge	1
11	CW003-001	Progressive cartridge	1
10	CW004-02	Cover	1
9	CB004-005	Aerator M18,5x1 with flow regulator 1,5 gpm	1
8	CB004-004	Washers jet for CB004 spout	1
7	CB004-003	Spout	1
6	BR003-004	Fixing kit	1
5	CB003-005	G3/8" Flexible pipe (Hot Water) L=400 mm	1
4	CB003-004	G3/8" Flexible pipe (Cold Water) L=400 mm	1
3	CB003-05	Base ring	1
2	CW004-03	Mixer body	1
1	CW004-04	Cover cartridge	1

N°	REVIEW	Date

Sheet **1 of 5**

Scale 1:2

Material

Weight 0 kg

Description

CW004
Washbasin mixer with swivel spout

Code	Date of issue	Chamfers not quoted	Finishing
CW004-00	16/04/2019	0.5x45°	SM Grinding / LU Polishing / CR GN

hotbath
italian bathroomware

This drawing is property reserved of Hotbath Srl.
Without express authorization, the copying, distribution and utilization of this document as well as the communication to others is prohibited